INDEECO



Tank Heating Solutions

Our products do more in a wide range of applications. Expect **More.**

Introduction 3-4

Storage Tank Heaters - For large tanks or heat sensitive materials.

- ANSI flange mounted heater with controls 5-6
- ANSI flange mounted heater without controls 7-8
- Adapter box mounted heater 9
- Rectangular flange mounted heater 10
- Storage Tank Heater Catalog Number System 11
- Open coil pipe insert heater 12

Controls - Cost effective, remote contactor and SCR control panels up to (2) 48 amp circuits.

- Quickship control panel 13

Additional Solutions 14

Limited Warranty 15



INDEECO

INDEECO Electric Storage Tank Heaters are used to maintain or raise the temperature of gases and fluids in tanks from -300°F to 1000°F for a variety of applications and industries. These heaters are designed with low watt density, open coil heating elements for uniform heating of even the most temperature sensitive
materials. The open coil heating element consists of heavy gauge nickel-chromium alloy wire supported by ceramic insulators that are fastened to a strip of heavy sheet metal. The open coil heating element can be replaced without draining the tank.

The heating elements are installed in 3" NPS pipes of sufficient wall thickness to prevent the pipe from distorting from the heat generated. Multiple pipes are provided as required. The heater is mounted to the tank by one of three methods: ANSI flange mount, adapter box mount or with a custom rectangular flange.

Additionally this style heater often features built-on controls for a complete heater system.

kW & Sizing

When specifying a Storage Tank Heater you must first determine whether the application requires that the temperature be maintained or if the temperature needs to be raised. Below are the calculations for each
application. You can also visit our website and utilize our online calculator; look for the free calculator link near the top of the page.

Maintain Temperature

To calculate the kW required to maintain the temperature of a tank you will need to determine the tank's surface area, process temperature to be
maintained, minimum ambient temperature and the R-value of the insulation.

Surface area:

Round tank —

$A\ (ft^2) = (2 \times p \times r \times h) + (2 \times p \times r^2)$

p = 3.14
r = radius (ft)
h = height (ft)

Rectangular tank —

$A\ (ft^2) = 2 \times [(l \times w) + (l \times h) + h \times w)]$

l = length (ft)
w = width (ft)
h = height (ft)

After determining the tank's surface area the maintain kW can be calculated as follows:

$kW = (A \times (1/R) \times \Delta T(°F) \times SF)/3412$

A = surface area
R = R-value of the insulation
- Use 0.5 as the R-value of an uninsulated steel tank
- See the chart below for typical examples
- R-value = thickness (in.)/k-factor

ΔT = difference between the process set point temperature and lowest ambient temperature
SF = safety factor, recommended 1.2
3412 = conversion of BTU to kW

Insulation Type	R-Value/inch of thickness
Fiberglass	3.0
Mineral fiber	3.7
Calcium silicate	2.0
Open-cell polyurethane foam	3.6
Closed-cell polyurethane foam	6.0
Polyisocyanurate spray foam	6.0

Example:

A 42' diameter x 40' tall crude oil tank with R-6 insulation needs to be maintained at 75°F given a minimum ambient temperature of 10°F.

$A = (2 \times 3.14 \times 21 \times 40) + (2 \times 3.14 \times 21^2)$
$A = 8044.68\ ft^2$

$kW = (8044.68 \times 1/6 \times 65 \times 1.2)/3412$
$kW = 30.65$

Raise Temperature

The kW calculation to raise the temperature of a material in a tank (heat-up) starts with the same information required in the maintain application. Additionally we'll need the weight of the material to be heated, the specific heat of the material and the time required to heat the material from its start temperature to its end temperature. The kW calculation to raise the temperature is as follows:

$kW_{total} = kW_{heat\text{-}up} + kW_{maintain}$

$kW_{heat\text{-}up} = [(M \times Cp \times \Delta T \times SF)/3412]/t$

M = weight of the material in pounds
Cp = Specific Heat, see examples in the chart
ΔT = difference between the process set point (end) temperature and the start temperature
SF = safety factor, recommended 1.2
3412 = conversion of BTU to kW
t = time in hours

$kW_{maintain} = (A \times (1/R) \times \Delta T(°F) \times SF)/3412$

A = surface area
R = R-value of the insulation
- Use 0.5 as the R-value of an uninsulated steel tank

ΔT = difference between the process set point temperature and lowest ambient temperature
SF = safety factor, recommended 1.2
3412 = conversion of BTU to kW

Example:

A 4' x 6' x 12' tank with 1800 gallons of water needs to be heated from 60°F to 95°F in 3 hours. The tank has R-4 insulation and the minimum ambient temperature is 0°F.

To begin we need to convert the gallons of water to pounds:

$lbs = G \times D_1$

G = gallons
D_1 = lbs per gallon from the chart below

lbs = 1800 x 8.34
lbs = 15,012

If the volume of the tank is stated in cubic feet (ft^3) the formula looks like this:

$lbs = C \times D_2$

C = Cubic feet of material
D_2 = lbs per ft^3 from the chart next column

Material	D_1 lbs/gallon	D_2 lbs/ft^3	Specific Heat
water	8.34	62.4	1
#1 fuel oil	6.8	50.5	0.47
#2 fuel oil	7.2	53.9	0.44
#3,4 fuel oil	7.5	55.7	0.425
#5,6 fuel oil	7.9	58.9	0.41
Bunker C	8.15	61	0.5
SAE 10-50 weight oil	7.4	55.4	0.43
ethylene glycol	9.4	70	0.55
50% ethylene glycol/water	8.8	65.8	0.76

$kW_{heat\text{-}up} = [(M \times Cp \times \Delta T \times SF)/3412]/t$
$kW_{heat\text{-}up} = [(15{,}012 \times 1 \times 35 \times 1.2)/3412]/3$
$kW_{heat\text{-}up} = 61.6$

plus

$kW_{maintain} = (A \times (1/R) \times \Delta T(°F) \times SF)/3412$
$kW_{maintain} = (288 \times 1/4 \times 95 \times 1.2)/3412$
$kW_{maintain} = 2.4$

$kW_{total} = 64$

Agency Approvals are availabe:

Storage tank heaters are available with CSA (Canadian Standards Association) label under File No. 151727

Flange mounted heater with controls

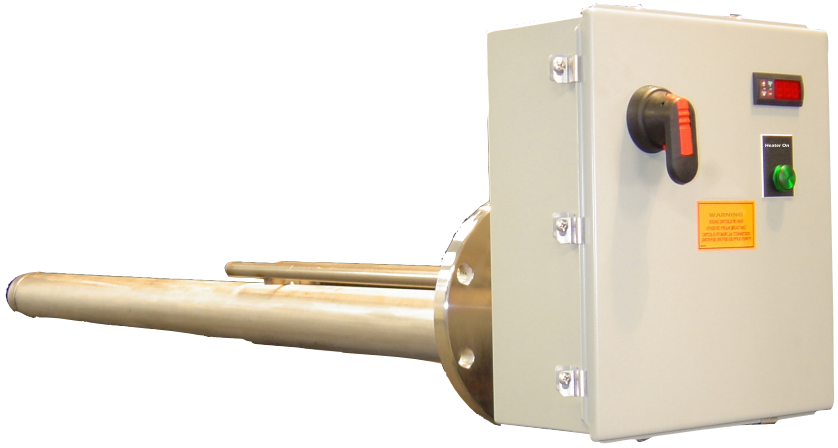

Construction features:

Heaters bolt to the tank via 150# ANSI raised face flange, rectangular flange or welded adapter box.
Heating elements slide into a 3" Schedule 40 pipe and utilize our cost effective open coil pipe insert heaters.
Heavy pipe wall provides up to 0.125" corrosion allowance.
Available with several control and high limit protection options (see page 11 for more details).
Heating element can easily be replaced without draining the tank.

304 SS Wetted Parts - 12 w/in² - With Built-on Controls

ANSI Flange Size	Number of Pipes	Catalog Number (*add the appropriate voltage code)	kW	"B" dim. (inches)	Availability					
					1 Phase			3 Phase		
					208V	240V	480V	208V	240V	480V
6	1	781C0060F1A412T5B2*	6	51	C	J	T	D	K	U
		781C0140F1A412T5B2*	14	112	—	—	T	—	—	U
		781C0240F1A412T5B2*	24	118	—	—	—	—	—	U
8	1	781C0140F1B412T5B2*	14	112	—	—	T	—	—	U
		781C0240F1B412T5B2*	24	118	—	—	—	—	—	U
8	2	781C0120F2B412T5B2*	12	51	C	J	T	D	K	U
		781C0280F2B412T5B2*	28	112	—	—	T	—	—	U
		781C0320F2B412T5B2*	32	127	—	—	—	—	—	U
		781C0480F2B412T5B2*	48	188	—	—	—	—	—	U
10	2	781C0280F2C412T5B2*	28	112	—	—	T	—	—	U
		781C0320F2C412T5B2*	32	127	—	—	—	—	—	U
10	3	781C0180F3C412T5B2*	18	51	C	J	T	D	K	U
		781C0420F3C412T5B2*	42	112	—	—	T	—	—	U
		781C0480F3C412T5B2*	48	127	—	—	—	—	—	U
		781C0720F3C412T5B2*	72	188	—	—	—	—	—	U
12	3	781C0420F3D412T5B2*	42	112	—	—	T	—	—	U
		781C0720F3D412T5B2*	72	188	—	—	—	—	—	U
12	4	781C0240F4D412T5B2*	24	51	C	J	T	D	K	U
		781C0560F4D412T5B2*	56	112	—	—	T	—	—	U
		781C0640F4D412T5B2*	64	127	—	—	—	—	—	U
		781C0960F4D412T5B2*	96	188	—	—	—	—	—	U

Flange mounted heater without controls

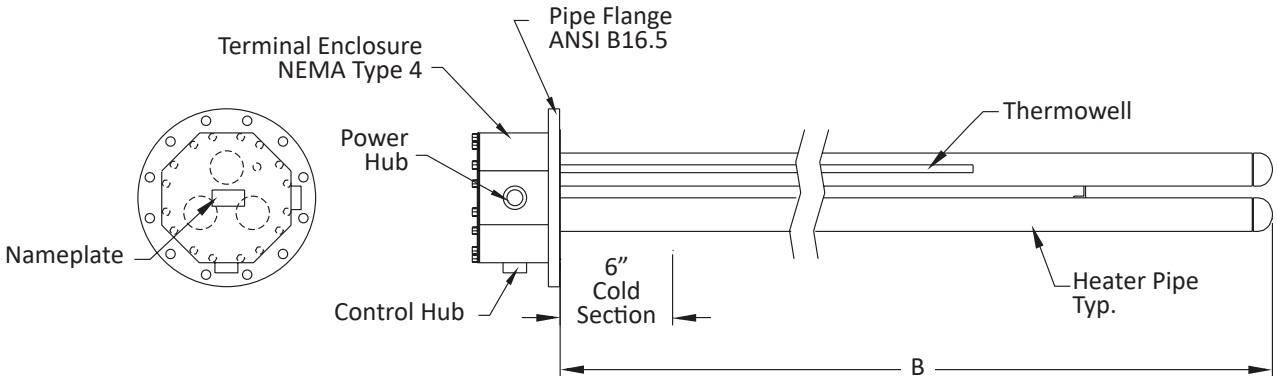

304 SS Wetted Parts - 12 w/in² With No Controls

ANSI Flange Size	Number of Pipes	Catalog Number (*add the appropriate voltage code)	kW	"B" dim. (inches)	Availability					
					1 Phase			3 Phase		
					208V	240V	480V	208V	240V	480V
6	1	781C0060F1A412W1W1*	6	51	C	J	T	D	K	U
		781C0140F1A412W1W1*	14	112	—	—	T	—	—	U
		781C0240F1A412W1W1*	24	188	—	—	—	—	—	U
8	1	781C0140F1B412W1W1*	14	112	—	—	T	—	—	U
		781C0240F1B412W1W1*	24	188	—	—	—	—	—	U
8	2	781C0120F2B412W1W1*	12	51	C	J	T	D	K	U
		781C0280F2B412W1W1*	28	112	—	—	T	—	—	U
		781C0320F2B412W1W1*	32	127	—	—	—	—	—	U
		781C0480F2B412W1W1*	48	188	—	—	—	—	—	U
10	2	781C0280F2C412W1W1*	28	112	—	—	T	—	—	U
		781C0320F2C412W1W1*	32	127	—	—	—	—	—	U
10	3	781C0180F3C412W1W1*	18	51	C	J	T	D	K	U
		781C0420F3C412W1W1*	42	112	—	—	T	—	—	U
		781C0480F3C412W1W1*	48	127	—	—	—	—	—	U
		781C0720F3C412W1W1*	72	188	—	—	—	—	—	U
12	3	781C0420F3D412W1W1*	42	112	—	—	T	—	—	U
		781C0720F3D412W1W1*	72	188	—	—	—	—	—	U
12	4	781C0240F4D412W1W1*	24	51	C	J	T	D	K	U
		781C0560F4D412W1W1*	56	112	—	—	T	—	—	U
		781C0640F4D412W1W1*	64	127	—	—	—	—	—	U
		781C0960F4D412W1W1*	96	188	—	—	—	—	—	U

Adapter Box Mounted Heater

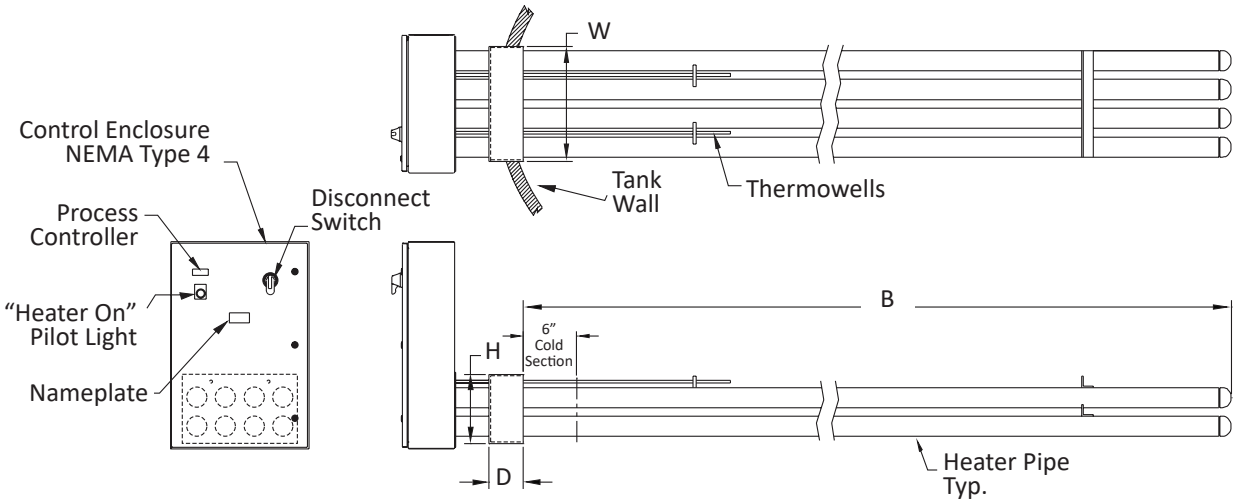

With Built-on Controls
304SS Wetted Parts - 12 w/in²

Adapter Box Size D x H x W	Number of Pipes	Catalog Number (*add the appropriate voltage code)	kW	"B" dim. (inches)	Availability					
					1 Phase			3 Phase		
					208V	240V	480V	208V	240V	480V
5" x 8" x 20"	4	781C0240A14412T5B2*	24	51	C	J	T	D	K	U
		781C0960A14412T5B2*	96	188	—	—	—	—	—	U
5" x 15" x 20"	8	781C1120A24412T5B2*	112	112	—	—	T	—	—	U
		781C1920A24412T5B2*	192	188	—	—	—	—	—	U
5" x 22" x 20"	12	781C1680A34412T5B2*	168	112	—	—	T	—	—	U
		781C2880A34412T5B2*	288	188	—	—	—	—	—	U

Without Controls
304SS Wetted Parts - 12 w/in²

Adapter Box Size D x H x W	Number of Pipes	Catalog Number (*add the appropriate voltage code)	kW	"B" dim. (inches)	Availability					
					1 Phase			3 Phase		
					208V	240V	480V	208V	240V	480V
5" x 8" x 20"	4	781C0240A14412W1W1*	24	51	C	J	T	D	K	U
		781C0960A14412W1W1*	96	188	—	—	—	—	—	U
5" x 15" x 20"	8	781C1120A24412W1W1*	112	112	—	—	T	D	K	U
		781C1920A24412W1W1*	192	188	—	—	—	—	—	U
5" x 22" x 20"	12	781C1680A34412W1W1*	168	112	—	—	T	—	—	U
		781C2880A34412W1W1*	288	188	—	—	—	—	—	U

Rectangular Flange Mounted Heater

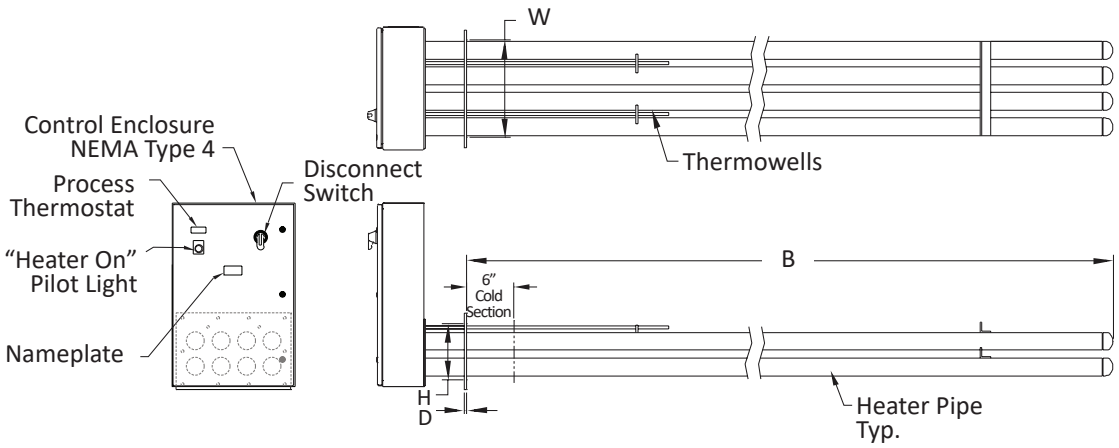

With Built-on Controls
304SS Wetted Parts - 12 w/in²

Rectangular Flange Size D x H x W Opening	Number of Pipes	Catalog Number (*add the appropriate voltage code)	kW	"B" dim. (inches)	Availability					
					1 Phase			3 Phase		
					208V	240V	480V	208V	240V	480V
1/2" x 8" x 20"	4	781C0240P14412T5B2*	24	51	C	J	T	D	K	U
		781C0960P14412T5B2*	96	188	—	—	—	—	—	U
1/2" x 15" x 20"	8	781C1120P24412T5B2*	112	112	—	—	T	—	—	U
		781C1920P24412T5B2*	192	188	—	—	—	—	—	U
1/2" x 22" 20"	12	781C1680P34412T5B2*	168	112	—	—	T	—	—	U
		781C2880P34412T5B2*	288	188	—	—	—	—	—	U

Without Controls
304SS Wetted Parts - 12 w/in²

Rectangular Flange Size D x H x W Opening	Number of Pipes	Catalog Number (*add the appropriate voltage code)	kW	"B" dim. (inches)	Availability					
					1 Phase			3 Phase		
					208V	240V	480V	208V	240V	480V
1/2" x 8" x 20"	4	781C0240P14412W1W1*	24	51	C	J	T	D	K	U
		781C0960P14412W1W1*	96	188	—	—	—	—	—	U
1/2" x 15" x 20"	8	781C1120P24412W1W1*	112	112	—	—	T	—	—	U
		781C1920P24412W1W1*	192	188	—	—	—	—	—	U
1/2" x 22" x 20"	12	781C1680P34412W1W1*	168	112	—	—	T	—	—	U
		781C2880P34412W1W1*	288	188	—	—	—	—	—	U

Storage Tank Heater Catalog Numbering System

7	8	1	C	0075	F1A	4	12	T1	B2	U

Listing
C = CSA Listed
N = Non-agency Listed

Heater kW rating
(round to nearest 0.1 kW)
0075 = 7.5 kW

Mounting

Type	Code	Size
ANSI FLANGE*	F1A	6-150# (1 pipe)
ANSI FLANGE*	F1B or F2B	8-150# (1 or 2 pipes)
ANSI FLANGE*	F1C, F2C, F3C	10-150# (1, 2, or 3 pipes)
ANSI FLANGE*	F1D, F2D, F3D, or F4D	12-150# (1-4 pipes)
Adapter box	A14	1 row, 4 pipes/row
Adapter box	A26	2 rows, 6 pipes/row
Rect mtg plate	P18	1 row, 8 pipes/row
Rect mtg plate	P24	2 rows, 4 pipes/row

* Replace "F" with "G" for 300# flange rating

Wetted Materials (mounting flange and pipes)
4= 304/304L SST
6= 316/316L SST

Watt Density (03-12 max)
03= 3 watts/sq inch (standard for heavy oils/pitch)
09= 9 watts/sq inch (light oils and misc fluids)
12= 12 watts/sq inch (for water applications)

Control Method
00= no controls
B1= ON/OFF bulb&cap tstat 0-100° F
B2= ON/OFF bulb&cap tstat 60-250° F
B5= ON/OFF bulb&cap tstat 200-550° F
E0= SCR w/customer suppl 3-32 VDC pulse
E1= SCR w/1/16 DIN ctrlr - type J T/C input
E2= SCR w/1/16 DIN ctrlr - type K T/C input
E3= SCR Customer supplied 4-20mA input
E4= SCR Customer supplied 0-10VDC input
JT= no controls, type J process T/C only
KT= no controls, type K process T/C only
T1= ON/OFF - digital thermostat type J T/C
T2= ON/OFF - digital thermostat type K T/C
T3= ON/OFF - 1/16 DIN ctrlr type J T/C
T4= ON/OFF - 1/16 DIN ctrlr type K T/C
T5= ON/OFF - digital thermostat with thermistor
W1= thermowell for customer sensor (1/2NPS sch 40 pipe)

Over-temperature options
00= no over-temperature control
B1= ON/OFF bulb&cap tstat 0-100° F (process sensor)
B2= ON/OFF bulb&cap tstat 60-250° F (process sensor)
B5= ON/OFF bulb&cap tstat 200-550° F (process sensor)
JH= type J process high limit T/C (sheath sensor)
KH= type K process high limit T/C (sheath sensor)
S1= Limit Ctrlr (32-999° F) type J T/C input (sheath sensor)
S2= Limit Ctrlr (32-999° F) type K T/C input (sheath sensor)
S3= DIN Limit Ctrlr (32-1600° F) type J T/C input (sheath sensor)
S4= DIN Limit Ctrlr (32-1600° F) type K T/C input (sheath sensor)
W1= thermowell for customer sensor - process sensor (1/2NPS sch 40 pipe)
W2= thermowell for customer sensor - sheath sensor (1/2NPS sch 40 pipe)

Voltage Code
A = 115/1
B = 120/1
C = 208/1
D = 208/3
E = 220/1
F = 220/3
G = 230/1
H = 230/3
J = 240/1
K = 240/3
N = 277/1
T = 480/1
U = 480/3
W = 575/1
X = 575/3
Y = 600/1
Z = 600/3

INDEECO

Pipe Insert Heater

Open Coil Pipe Insert Heaters are designed to insert into a horizontal 3” pipe (pipe supplied by others) mounted just above the anticipated sludge level in the tank and below the expected minimum operational fluid level. These units provide a low watt density over a large surface area and can be used to heat sensitive fluids. Advantages include the ability to change the element without draining the tank and to provide up to a Schedule 80 pipe wall in mildly corrosive fluids.

Pipe Insert Heater Catalog Number System

7	9	7	-	0075	-	12	-	12	-	U

Heater kW rating
(round to nearest .1 kW)
0075 = 7.5 kW

Watt Density (03-12 max)
03= 3 watts/sq inch (standard for heavy oils/pitch)
09= 9 watts/sq inch (light oils and misc fluids)
12= 12 watts/sq inch (for water applications)

Cold length (inches)
06 = 6" cold length , standard for heater with NO CONTROLS (pg 7&8)
12 = 12" cold length , standard for heater with WITH CONTROLS (pg 5&6)

Voltage Code
C = 208/1
D = 208/3
J = 240/1
K = 240/3
U = 480/3
T = 480/1

Insert Heaters for use in Tank Heaters WITH Built-in Controls (pg 5&6)

Catalog Number (*add the appropriate voltage code)	kW	“CL” Cold Length	Heater “B” Dim (inches)	Pipe “PL” dim (inches)	Availability					
					1 Phase			3 Phase		
					208V	240V	480V	208V	240V	480V
12 w/in^2										
797-0060-12-12-*	6	12	51	49	C	J	T	D	K	U
797-0140-12-12-*	14	12	112	110	—	—	T	—	—	U
797-0160-12-12-*	16	12	127	125	—	—	—	—	—	U
797-0240-12-12-*	24	12	188	186	—	—	—	—	—	U
3 w/in^2										
797-0015-03-12-*	1.5	12	51	49	C	J	T	D	K	U
797-0045-03-12-*	4.5	12	142	140	C	J	T	D	K	U
797-0060-03-12-*	6	12	188	186	C	J	T	D	K	U
797-0070-03-12-*	7	12	218	216	—	J	T	D	K	U

Insert Heaters for use in Tank Heaters WITHOUT Built-in Controls (pg 7&8)

Catalog Number (*add the appropriate voltage code)	kW	“CL” Cold Length	Heater “B” Dim (inches)	Pipe “PL” dim (inches)	Availability					
					1 Phase			3 Phase		
					208V	240V	480V	208V	240V	480V
12 w/in^2										
797-0060-12-06-*	6	6	51	49	C	J	T	D	K	U
797-0140-12-06-*	14	6	112	110	—	—	T	—	—	U
797-0160-12-06-*	16	6	127	125	—	—	—	—	—	U
797-0240-12-06-*	24	6	188	186	—	—	—	—	—	U
3 w/in^2										
797-0015-03-06-*	1.5	6	51	49	C	J	T	D	K	U
797-0045-03-06-*	4.5	6	142	140	C	J	T	D	K	U
797-0060-03-06-*	6	6	188	186	C	J	T	D	K	U
797-0070-03-06-*	7	6	218	216	—	J	T	D	K	U

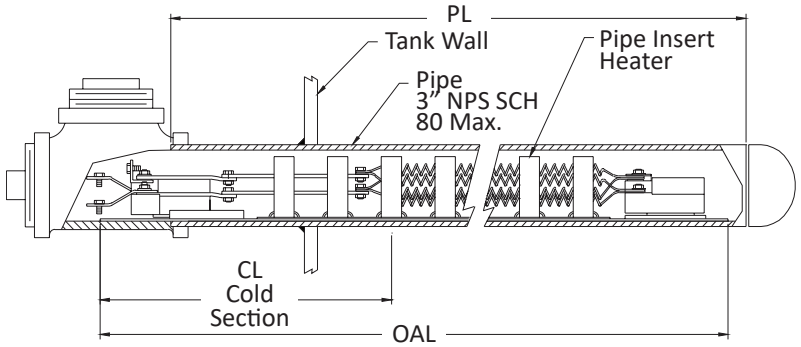

Quick Ship Control Panel



Quick Ship Control Panel - Provides fast shipment, compact packaging, and is pre-engineered for resistive load applications. Each panel is completely assembled, pre-wired, tested and ready for trouble free installation and operation.

Designed for use in industrial environments and outdoor installations.[4]

Standard Construction Features:
- Single or three phase loads
- 120 VAC control transformer
- UL Listed
- Wiring diagram permanently affixed to the inside of the cover
- Terminals for customer supplied remote interlock

Standard Contactor Panel Features:
- NEMA 4X fiberglass enclosure
  - -16" x 14" x 8" for 1 circuit (48 amps max.)
  - -20" x 16" x 8" for 2 circuits (96 amps max.)
- 50 amp contactor for resistive loads (per circuit)

Standard SCR Panel Features:
- NEMA 4/12 painted, carbon steel enclosure
  - -20" x 16" x 8" for 1 circuit (48 amp max.)
  - -24" x 20" x 8" for 2 circuit (96 amps max.)
- 50 amp SCR power controller (per circuit)
- 50 amp safety contactor (per circuit)

Optional Features:
- Disconnect switch[1]
- Power fusing[2]
- Enclosure heater[3]
- Pilot light to indicate heater "ON"
- Digital indicating thermostat (°F only) 32-999°F range
- Digital 1/16th DIN process controller with RS485 communications available (°F or °C) 0-1600°F range
- Digital indicating limit controller with manual reset (°F only) 32-999°F range
- Digital 1/16th DIN limit controller with manual reset (°F or °C) 0-1600°F range

Ordering Information, build your Quick Ship Controls Panel part number

8 7 3 - U T 1 0 4 8 U - OPTION CODES

AGENCY APPROVAL
U - UL

CONTROL METHOD
T1 = Contactor, Remote Thermostat
T2 = Contactor, Digital Thermostat - Type J T/C Input
T3 = Contactor, 1/16 DIN Controller - Type J T/C Input
T4 = Contactor, 1/16 DIN Controller - Type K T/C Input
E0 = SCR, Cust. Supplied 3-32 VDC Pulsed Input
E1 = SCR, 1/16 DIN Controller - Type J T/C Input
E2 = SCR, 1/16 DIN Controller - Type K T/C Input
E3 = Customer Supplied 4-20mA Input
E4 = Customer Supplied 0-10 VDC Input

AMPERAGE RATING
048 = 1 Circuit at 48 Amps Max
096 = 2 Circuits at 96 Amps Max (48 Amps Max. Each)

D = Disconnect Switch[1]
F = Power Fusing[2]
H = Enclosure Heater[3]
L = Pilot Light - Heater On (across safety contactor)

OVER-TEMPERATURE OPTION
S1 = Limit Ctrlr (32-999°F) Type J T/C Input
S2 = Limit Ctrlr (32-999°F) Type K T/C Input
S3 = DIN Limit Ctrlr (0-1600°F) Type J T/C Input
S4 = DIN Limit Ctrlr (0-1600°F) Type K T/C Input

VOLTAGE CODE
C = 208/1
D = 208/3
J = 240/1
K = 240/3
T = 480/1
U = 480/3

Note:
1. NEC code requires disconnecting means within sight of a heater.
2. Power fusing is required by NEC for panels greater than 48 amps.
3. Heater is recommended for outdoor panels in cold environments with ambient below 32°F.
4. Although designed and tested for use in outdoor locations, UL rating is Type 1 only.

Additional Solutions

Flange Heater — Utilizes standard ANSI flanges with steel, 304 stainless steel, incoloy 800, or copper elements to heat a variety of fluids. Contact your local sales representative or refer to catalog C70 for further information on INDEECO flange heaters.

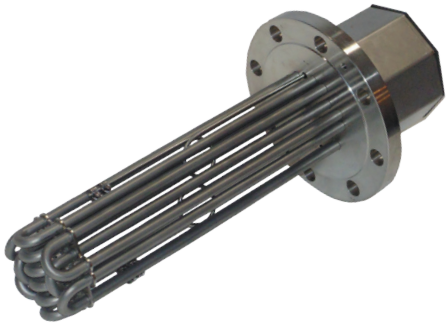

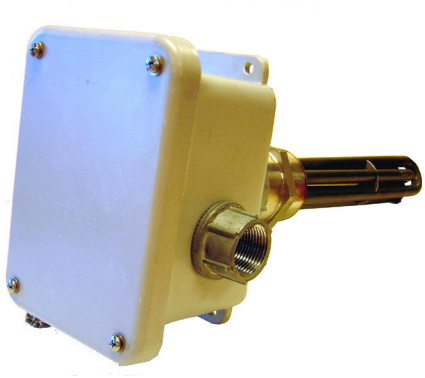

Pipe Thread Heater — Available in 1", 1-1/4", 2", 2-1/2" NPT with steel, 304 stainless steel, incoloy or copper elements to heat a variety of fluids. Contact your local sales representative or refer to catalog C70 for further information on INDEECO pipe thread heaters.

Circulation Heater — Utilizing a pipe thread or flange heater with a pressure vessel, INDEECO circulation heaters are designed to your specific application. Contact your local sales representative or refer to catalog C35 for further information on INDEECO circulation heaters.

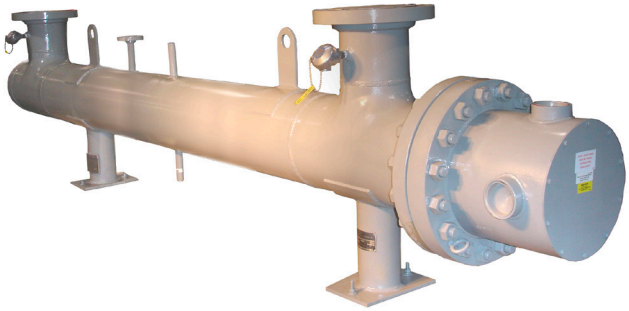

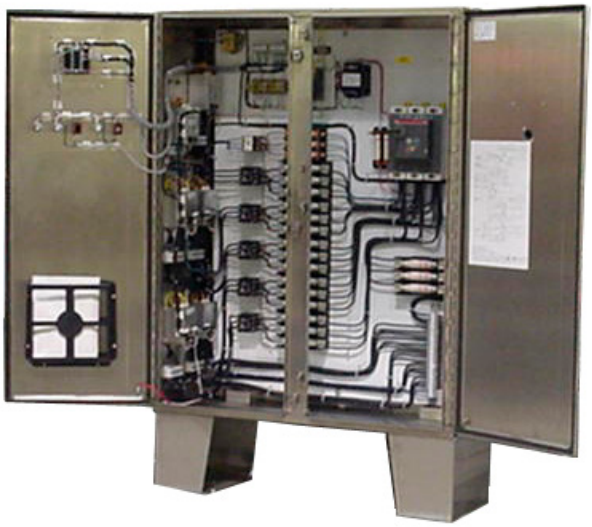

Heater Control Panel — INDEECO manufactures a control panel to complement every heater offered. Contact your local sales representative or refer to catalog C87 for further information on INDEECO heater control panels.

Limited Warranty

INDEECO products are warranted against defects in workmanship, material, design, labeling and packaging. No other warranty, expressed or implied, written or oral, applies. No person other than an officer or the general manager of INDEECO is authorized to give any other warranty or assume any liability.

Warranty Period: This warranty is effective for eighteen months from the date of shipment of the product from INDEECO's factory, or for twelve months from the date the product is first placed in service, whichever period lapses first.

Conditions of Warranty: INDEECO products must be installed, operated and maintained in accordance with INDEECO's instructions. INDEECO is not liable for damage or unsatisfactory performance of the product resulting from accident, negligence, alteration, unauthorized repair, improper application or installation of the product, improper specifications or corrosion. INDEECO IS NOT LIABLE FOR ANY INCIDENTAL OR CONSEQUENTIAL DAMAGES. Claims against carriers for damage in transit must be filed by the purchaser with the carrier.

Remedy: Contact INDEECO at 314-644-4300 for a Return Material Authorization Number (RMA#) and return instructions.

If after receipt of the product and the claim, INDEECO finds to its reasonable satisfaction that the product is defective in workmanship, material, design, labeling or packaging, the product will be repaired or replaced or the purchase price refunded at INDEECO's option. There will be no charge to the purchaser for parts or labor. Removal and reinstallation of the product, and shipment of the product to INDEECO for repair or inspection shall be at the purchaser's risk and expense.

THE REPAIR, REPLACEMENT OR REFUND PROVIDED FOR IN THIS LIMITED WARRANTY IS THE EXCLUSIVE REMEDY OF THE PURCHASER. THIS WARRANTY IS EXPRESSLY IN LIEU OF ANY OTHER WARRANTIES, EXPRESSED OR IMPLIED, INCLUDING ANY WARRANTY OF MERCHANTABILITY OR FITNESS FOR A PARTICULAR PURPOSE. THERE ARE NO WARRANTIES WHICH EXTEND BEYOND THE TERMS OF THIS LIMITED WARRANTY.

We have the experience and expertise to provide you with the personalized support to arrive at customized solutions.

Email sales@indeeco.com or call 800.243.8162 to find your nearest Indeeco representative.



INDEECO 425 HANLEY INDUSTRIAL COURT ST. LOUIS, MO 63144 USA T 314.644.4300 F 314.644.5332 **INDEECO.COM**

MKL-4042-01